New Jersey Semi-Conductor Products, Inc.

20 STERN AVE.
SPRINGFIELD, NEW JERSEY 07081
U.S.A.

TELEPHONE: (973) 376-2922
(212) 227-6005
FAX: (973) 376-8960

NPN SILICON PLANAR TRANSISTOR

2N497 2N498 2N656 2N657

This family of Raytheon types are silicon planar NPN transistors designed for medium power, fast switching applications and are recommended for servo amplifier, medium power amplifiers and magnetic core drivers.

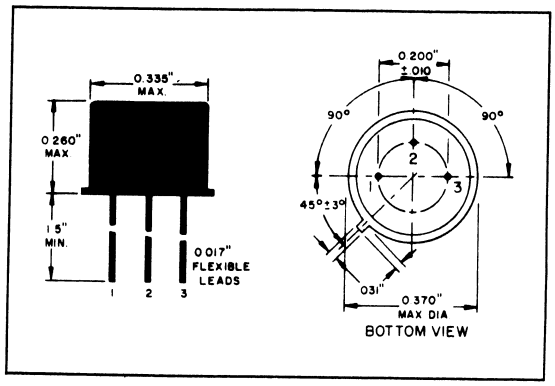

MECHANICAL DATA

CASE:
JEDEC TO-5

TERMINAL CONNECTIONS:
Lead 1 Emitter
Lead 2 Base
Lead 3 Collector (Electrically connected to case)

ELECTRICAL DATA

ABSOLUTE MAXIMUM RATINGS:

	2N497	2N498	2N656	2N657	UNITS
Collector to Base Breakdown Voltage BV_{CBO}	60	100	60	100	volts
Collector to Emitter Breakdown Voltage BV_{CEO}	60	100	60	100	volts
Emitter to Base Breakdown Voltage BV_{EBO}	8.0	8.0	8.0	8.0	volts
Collector Dissipation at 25 ° C (Case Temperature)	4.0	4.0	4.0	4.0	watts
Collector Dissipation at 25° C (Ambient)	0.8	0.8	0.8	0.8	watts
Junction Temperature (Operating)	−65° C to +200° C				
Storage Temperature	−65° C to +200° C				

ELECTRICAL CHARACTERISTICS: @25° C (unless otherwise noted)

	SYM.	CONDITIONS	2N497, 2N498 MIN.	TYP.	MAX.	2N656, 2N657 MIN.	TYP.	MAX.	UNITS
Collector Base Reverse Current	I_{CBO}	Maximum rated voltage	....	0.1	10	....	0.1	10	μA
Emitter Base Reverse Current	I_{EBO}	Maximum rated voltage	....	.05	250	....	.05	250	μA
Collector Cutoff Current	I_{CBO}	V_{CB}=30 V	....	.002	10	....	.002	10	μA
DC Current Gain	h_{FE}	I_C=200 mA, V_C=10 V ▲	12	20	36	30	60	90	....
DC Input Resistance	h_{IE}	I_B=8.0 mA, V_C=10 V ▲	....	50	500	....	50	500	ohms
Saturation Voltage	V_{CE}	I_C=200 mA, I_B=40 mA ▲	....	2.0	5.0	....	2.0	5.0	volts
Output Capacitance	C_{ob}	V_C=10 V, I_C=0	....	14	....	....	14	....	μμf
High Frequency Current Gain	h_{fe}	V_C=10 V, I_C=50 mA, f=20 mc	....	2.5	....	....	3.0	....	....

▲ Measured with 300 μSec, 2% duty cycle pulse